PASOLITE

Technical Specifications

General

Model Number	: POSC 17 / POSC 18
System Watt	: 8w / 15w
Driver Integral	: Constant Current
Operating Voltage	: 120-265Vac
Operating Temperature	: +10°C~+50°C

Physical

Body	: Die-Cast Aluminium with Extruded Aluminium Tube
Diffuser	: Clear PC Lens
Gasket	: Silicone
Mounting	: Surface
Finish	: Powder coated Rose Gold / white / Black

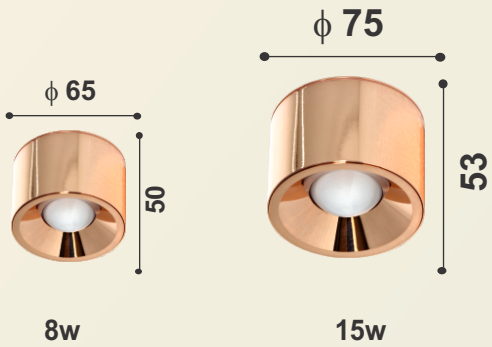

IP54 Ik08

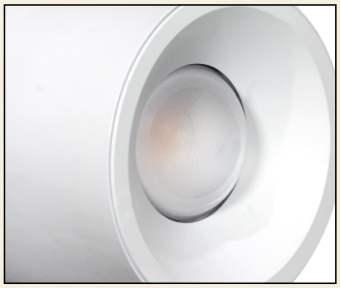

Light Source

Light Source	: Epistar / Everbrite
CRI (Ra)	: ≥80
LED Colour Temperature	: 3000K

Driver

Power Supply	: Integral
Input Voltage	: 220-240VAC
Frequency	: 50Hz
Power Factor	: ≥0.5
Surge Protection	: 2 KV
Efficiency	: >85%
Driver Specification	: DC 24 - 42V 180mA / DC 40-60V 250mA
Luminous Flux (LM)	: 800lm(± 10% lm) / 1500lm(± 10% lm)

Optical Performance

Light Distribution	: Symmetrical

PASOLITE

A premium decorative ceiling light featuring a sleek cylindrical body with a refined gold /white, champagne metallic finish and a reflective interior. Its elegant design combines modern aesthetics with functional illumination, making it ideal for creating a sophisticated and luxurious atmosphere. The recessed light source is positioned inside the housing to provide controlled, comfortable illumination while the metallic reflector enhances the visual appeal and light distribution..

Product Description

- Premium metal/aluminium construction
- Elegant gold/white, champagne finish
- Reflective inner surface for enhanced light output
- Integrated LED lighting
- Soft and comfortable illumination
- Modern, minimalist appearance
- Compact and easy-to-install design
- Cylindrical surface-mounted design
- Suitable for residential and commercial interiors
- Low-maintenance and long-lasting construction
- CRI (Ra): ≥80; CRI 90 available on request. Available CCT: 3000K warm white.

IP54 IK08

Product Benefits

- Precise Directional Lighting Adjstable Head allows Light to be Focused Exactly Where Needed
- Elegant, Robust design
- Dark sky compliant protects pedestrians from glare by preventing spill light above the horizontal plane.
- Sustainable LED technology offers durability and optimal light output with low power consumption.

Area of Application

Suitable for ceiling / Living Rooms & Lounges / Bedrooms & Hallways

Available Finish

Pure polyester powder coated

Rose Gold / white / Black